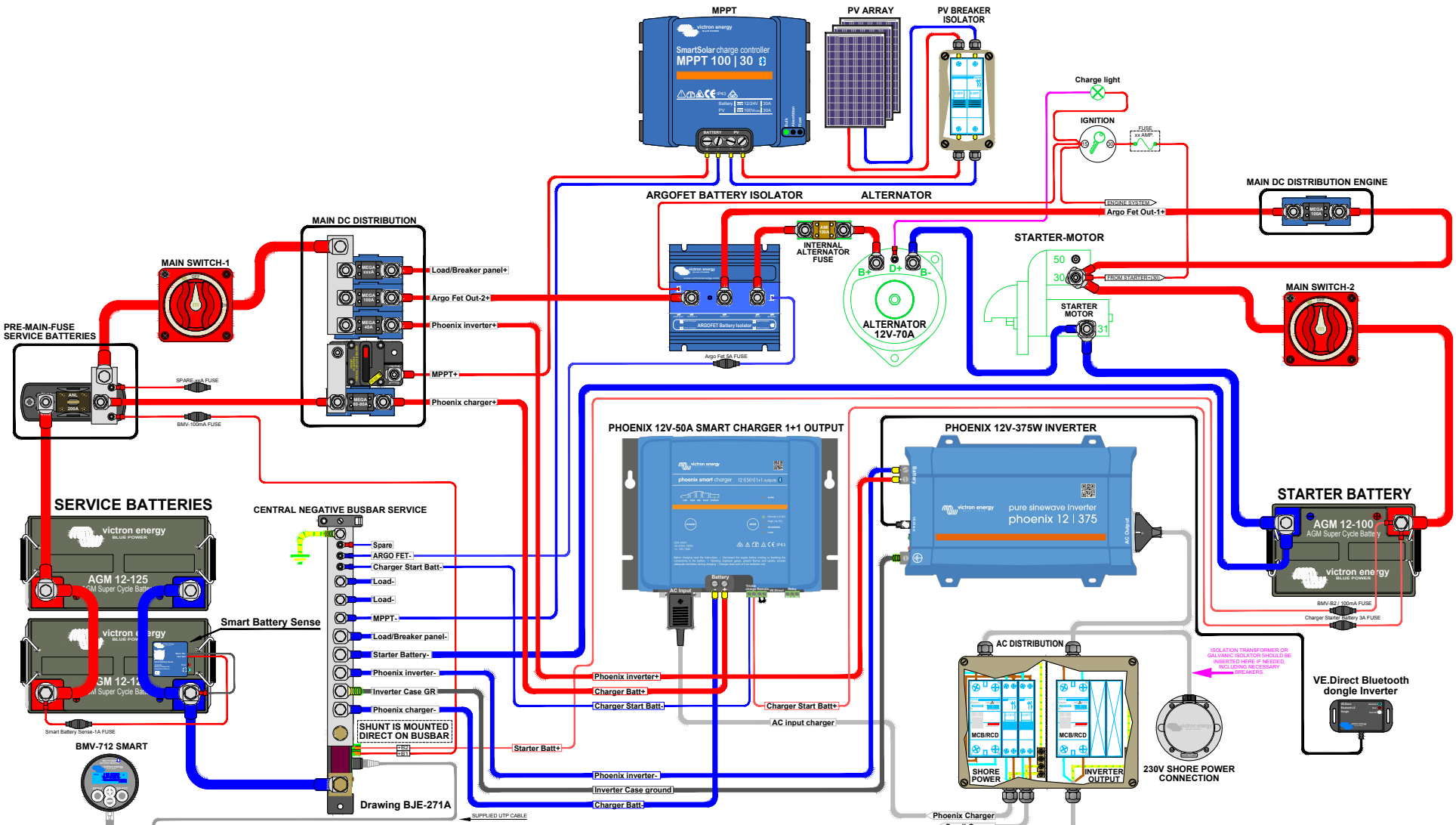

Setup and change of settings trough Bluetooth	Recommended DC cable/fuse size Phoenix charger	Recommended DC cable/fuse size Phoenix Inverter	Recommended AC cable/breaker sizes
All Bluetooth accessible devices can be setup and monitored with use of the VE.Smart Network by using the freely downloadable Victron Connect App. When in doubt, consult your Victron dealer.	50A charger 0-4 m cable length: 16SQmm Cable length stands for the total distance between the battery connections plus and minus and the Phoenix smart charger connections ! Fuse size should be 60-80A max. Max cable size to connect is 16SQmm.	375W Inverter with 0-1,5 m cable length: 6SQmm 375W Inverter with 1,5-3 m cable length: 10SQmm Cable length stands for the total distance between the battery connections plus and minus and the Phoenix Inverter connections ! External Fuse size should be 40-50A max.	AC Shore power IN must be protected by a MCB/RCD circuit breaker rated at 16A max or less depending on the size of the connected users. AC Inverter OUT must be protected by MCB/RCD circuit breaker combination rated at the size of the Inverter. Cable sizes need to be adjusted accordingly.

WARNING

230 VOLT IS EXTREMELY HAZARDOUS DO NOT TOUCH ANY LIVE WIRED PARTS OF THE INSTALLATION ! WHEN IN DOUBT, ALWAYS CONSULT YOUR VICTRON DEALER !